CHANGE LETTER	DWN BY	CHK BY	APPD BY	DATE	DCN & DESCRIPTION
–	RF			01/28/98	Initial Issue
A	RF			03/6/98	ATF-34143 was NE34018, general clerical

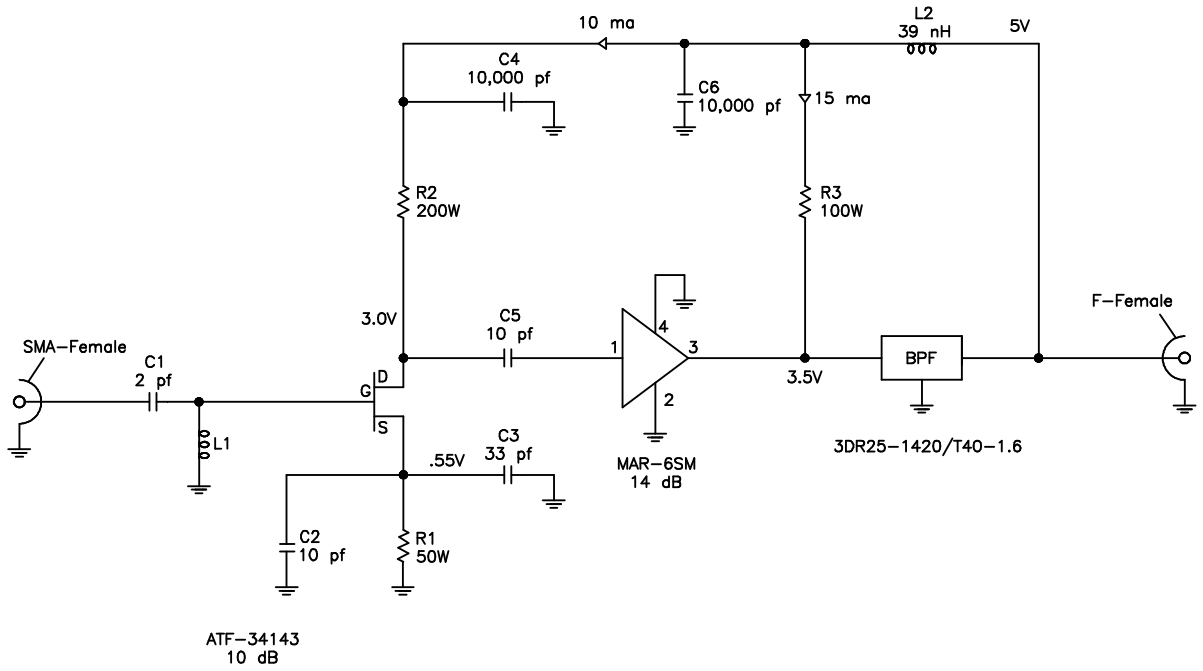

L = 0.3" of 0.01" diameter wire

NOTES:

ELECTRONICS NOTES: UNLESS OTHERWISE NOTED: RESISTORS: INDUCTORS: CAPACITORS:	MATERIAL: – FINISH AND/OR HEAT TREATMENT: –	SHOP NOTES: UNLESS OTHERWISE SPECIFIED 1. DIMENSIONS ARE IN INCHES 2. TOLERANCE ON DIMENSIONS FRACTIONAL ± 1/64 DECIMAL .XX ± .01 DECIMAL .XXX ± .005 ANGULAR ± 2°-30' 3. SURFACE ROUGHNESS PER MIL-STD-10 4. REMOVE BURRS AND BREAK SHARP EDGES 1/64 MAX. 5. SCREW THREADS PER MIL-STD-9 6. ALL DIMENSIONS TO APPLY BEFORE PLATING OR CONVERSION COATING.	USED ON: SRT NEXT ASSEMBLY: REQD: SCALE: – CLASSIFICATION:	DRAWN FOR: Joe Crowley DATE: 01/28/98 DRAWN BY: Ron Fiano 01/28/98 CHECKED BY: APPROVALS: PROJECT: ENGINEER: MAT'L & PROCESS: STRUCTURES: THERMAL: MECH. ANALYSIS:	NORTHEAST RADIO OBSERVATORY CORPORATION HAYSTACK OBSERVATORY WESTFORD, MASSACHUSETTS Schematic, 0.5 dB N.F. Low Noise Preamp SCHEMNFP.DWG CAD FILE: D SCHEMNFP REV A